Stopcock for pressure measuring instruments Model 910.10, brass, steel or stainless steel

Applications

Shut-off device for pressure measuring instruments, for measurement of liquids, gases and vapours

Special features

- Version per DIN 16261, DIN 16262 and DIN 16263
- Nominal pressures to ≤ 25 bar
- Operating temperature ≤ 50 °C

Stopcock
Female / male G ½ / G ½ B, DIN 16261, PN 25

Description

Stopcocks provide the opportunity to either vent the connected pressure gauge according to the position of the handle (venting position), i.e. put it into a pressure-free state, or to vent the pressure measuring instrument under pressure (operating position) or to let the medium escape (blow position). The table on page 2 lists the nominal pressure PN for each version.
For higher pressures shut-off valves must be used.

Test connection version
Stopcocks with test connection are intended for the simultaneous connection of operating pressure measuring instruments and test connection pressure gauges to the pressure pipeline. With this version, the third route, which leads to the outside at the standard version, is used as connection for a test connection pressure gauge. A fourth position of the handle enables the simultaneous connection of the operating and the test connection pressure measuring instruments to the pressure pipeline.

Standard version

Cock case (wetted part) and handle
Material: Brass CW614N [1], bright
Handle installed in the case with silicon free grease

Test connection
Test pivot M20 x 1.5
or test flange Ø 40 x 5 mm resp. 60 x 25 x 10 mm

Options

- Wetted parts: Brass, CW614N [1], chrome plated
  Steel
  Stainless steel 1.4571
- With gland packing, without venting bore (only at standard version)
- Special threads

Design	Connection	PN in bar	Wetted parts	Order number
Female / female	G ¼ G ⅜ G ½	6 16 25	Brass Brass Brass	9090029 9091807 9090045
■ With test flange Ø 40 x 5	G ½	25	Brass	9091777
■ With test flange 60 x 25 x 10	G ½	25	Brass	9090053
■ With gland packing [2]	G ½	25	Brass	9090061
Female / male	G ¼ G ⅜ G ½	6 16 25	Brass Brass Brass	9090070 9091815 9090096
■ With test flange Ø 40 x 5	G ½	25	Brass	9091785
■ With test flange 60 x 25 x 10	G ½	25	Brass	9090100
■ With gland packing [2]	G ½	25	Brass	9090118
Union nut / female	G ½	25	Brass	9090126
■ With test flange 60 x 25 x 10	G ½	25	Brass	9090134
Union nut / male	G ½	25	Brass	9090142
■ With test flange 60 x 25 x 10	G ½	25	Brass	9090150
LH-RH adjusting nut / male	G ¼ G ½ G ½	6 25 25	Brass 1.4571 Brass	9095080 9090959 2087174
■ With test connection M20 x 1,5	G ½	16	Brass	9091130
■ With test connection M20 x 1,5	G ½	16	1.4571	9091149

1) Alternative: Brass CW617N
2) Medium temperature ≤ +80 °C without venting bore

Dimensions in mm

Standard version

Female / female

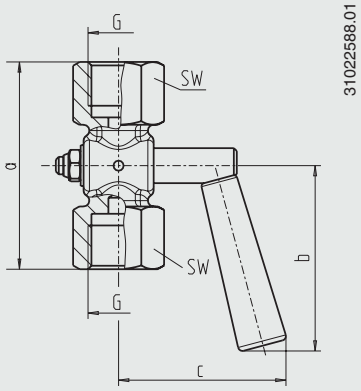

Female / male

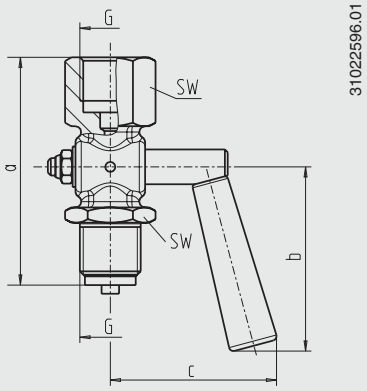

Union nut / female

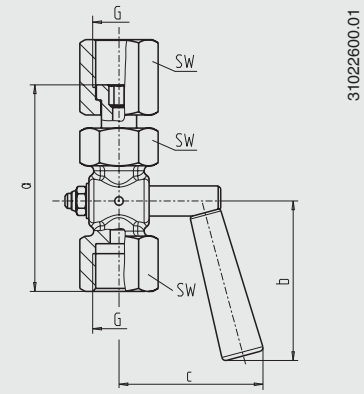

Union nut / male

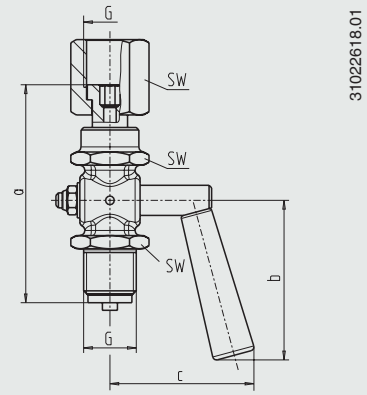

LH-RH adjusting nut / male

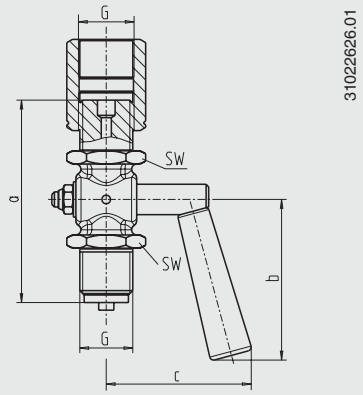

Design	Entry per EN 837-1	Dimensions in mm			SW	Weight in kg
		a ±3	b ±3	c ±3		
Female / female	G ¼	48	29	30	17	0.06
Female / male	G ¼	51	29	30	17	0.06
Female / female	G ½	71	64	57	27	0.25
Female / male	G ½	78.5	64	57	27	0.28
Union nut / female	G ½	82	64	57	27	0.32
Union nut / male	G ½	87	63.5	57	27	0.33
LH-RH adjusting nut / male	G ½	87	63.5	57	27	0.40
Female / female	G ⅜	62	64	43	22	0.14
Female / male	G ⅜	60	64	43	22	0.12
LH-RH adjusting nut / male	G ¼	55	29	30	17	0.07

Ordering information

To order the described product, the given order number is sufficient. Other options require additional specification.